SL-PCB PRESSURE COMPENSATING REGULATOR VALVE

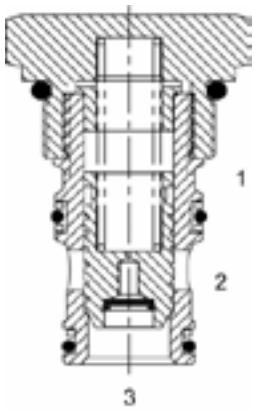

DESCRIPTION

16 size, 1 5/16-12 thread, “Super” series, pressure compensating regulator valve.

OPERATION

The SL-PCB-0P with an orifice between ports (3) and (1) maintains a constant flow rate from (3) regardless of load pressure changes in the system upstream of (3), or in the bypass leg at (2) as long as pressure at (2) is less than (1). The valve’s spool maintains a constant differential pressure across a internal orifice, thereby regulating the hydraulic flow rate from across this external orifice (see options table for pressure ranges). When used with an orifice as described above, it functions as a priority type regulator, delivering pump flow first to the external orifice, then bypassing excess to (2). All ports may be fully pressurized. The SL-PCB-0V with a dump valve and a pilot relief valve at (1) acts as main stage of a ventable relief valve.

FEATURES

- Hardened parts for long life.
- Industry common cavity.

Can be used as a logic element. SL-PCB-0P is commonly used as a bypass flow regulator (100 PSI recommended). SL-PCB-0V is commonly used as the main stage of a ventable relief valve (50 and 100 PSI recommended).

HYDRAULIC SYMBOL

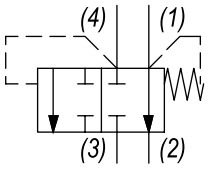

VALVE SPECIFICATIONS

Nominal Flow	40 GPM (151 LPM)
Rated Operating Pressure	3500 PSI (241 bar)
Seat Ratio	Initially area of Pilot is 1.5 times the area at Port (3), then 1:1
Viscosity Range	36 to 3000 SSU (3 to 647 cSt)
Filtration	ISO 18/16/13
Media Operating Temp. Range	-40° to 250°F (-40° to 120°C)
Weight	.71 lbs (.32 kg)
Operating Fluid Media	General Purpose Hydraulic Fluid
Cartridge Torque Requirements	90 ft-lbs (122 Nm)
Cavity	SUPER 3WS
Cavity Form Tool (Finishing)	40500017
Seal Kit	21191406

PERFORMANCE

Actual Test Data (Cartridge Only)

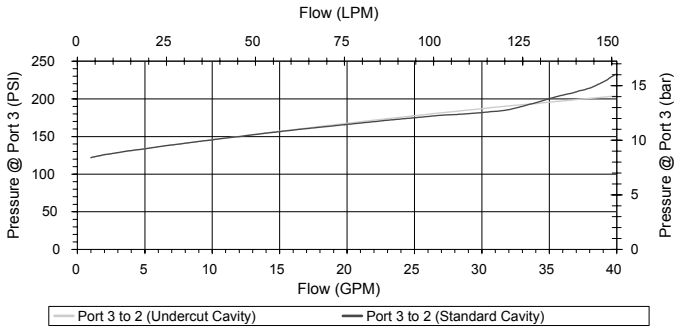

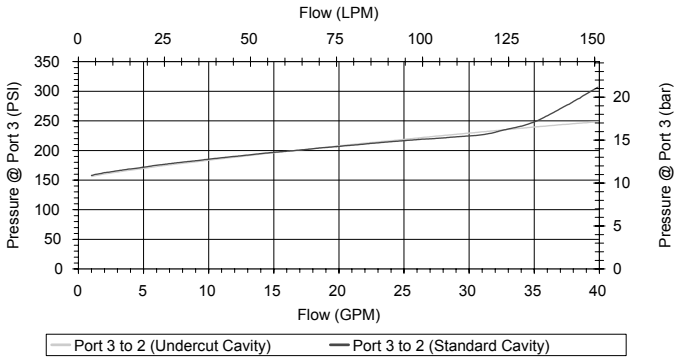

WARNING: *the specifications/application data shown in our catalogs and data sheets are intended only as a general guide for the product described (herein). Any specific application should not be undertaken without independent study, evaluation, and testing for suitability.*

Delta Power Company

4484 Boeing Drive Rockford, IL 61109 • USA • Phone +1 (815) 397-6628 • Fax +1 (815) 397-2526
mail: delta@delta-power.com • **www.delta-power.com**

TECNORD

Via Malavolti, 36 • 41122 Modena • ITALY • Phone +39 (059) 254895 • Fax +39 (059) 253512
mail: tecnord@tecnord.com • **www.tecnord.com**

DIMENSIONS

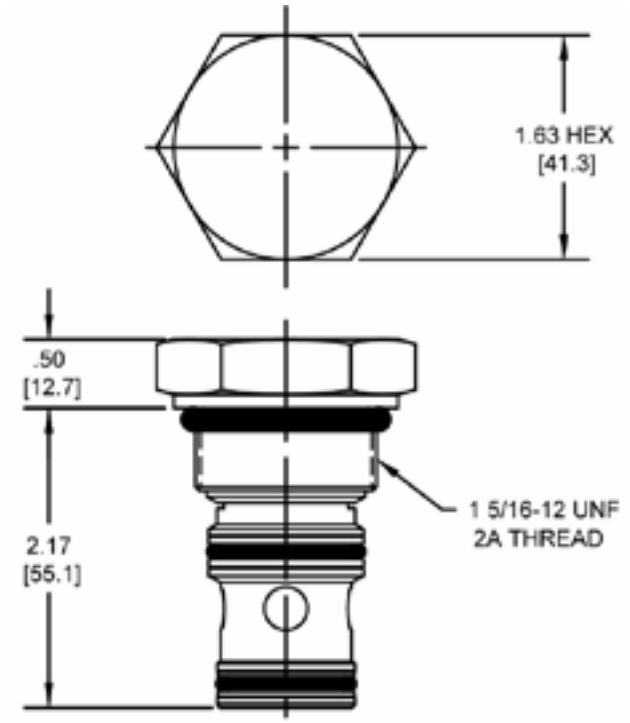

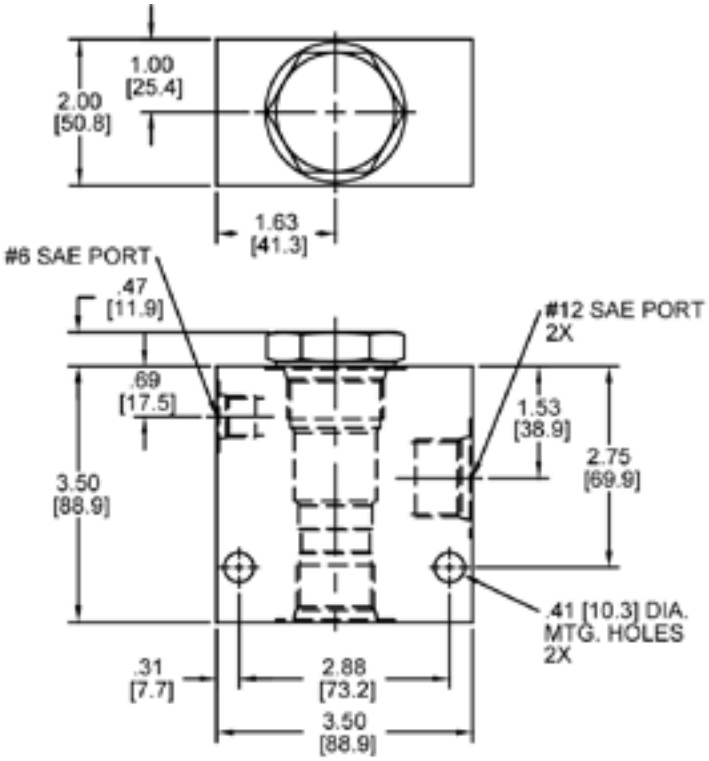

Body Weight: 1.89 lbs (.86 kg)

ORDERING INFORMATION

SL-PCB – _____ – _____ – _____

OPTIONS

Buna, Pilot to Close	**0P**
Viton, Pilot to Close	**VP**
Buna, Vent to Open	**0V**
Viton, Vent to Open	**VV**
Buna, Pilot to Close with Seals	**0B**
Viton, Pilot to Close with Seals	**VB**
Buna, Vent to Open with Seals	**0C**
Viton, Vent to Open with Seals	**VC**

Δ P SETTING
@ 1 GPM with Pilot Vented

0020	20 PSI
0050	50 PSI
0100	100 PSI
0150	150 PSI
	±20%

BODIES

Blank	Without Body
S	#12 SAE Ports

WARNING: *the specifications/application data shown in our catalogs and data sheets are intended only as a general guide for the product described (herein). Any specific application should not be undertaken without independent study, evaluation, and testing for suitability.*

Delta Power Company
4484 Boeing Drive Rockford, IL 61109 • USA • Phone +1 (815) 397-6628 • Fax +1 (815) 397-2526
mail: delta@delta-power.com • **www.delta-power.com**

TECNORD
Via Malavolti, 36 • 41122 Modena • ITALY • Phone +39 (059) 254895 • Fax +39 (059) 253512
mail: tecnord@tecnord.com • **www.tecnord.com**